Revisions		
Issue	**Date**	**Note**
2	29/03/2022	See note GTXPDC/459 - checked DB 05/04/2022

DATASHEET

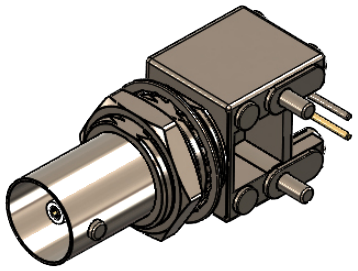

1. Mechanical

Fixing Method	PCB
Durability	500 mating cycles

2. Environmental

RoHS Compliant	Yes
Temperature Range	-55 to +85 degrees C

3. Electrical

Dielectric Withstanding	1500 Volts RMS Maximum
Impedance	75 ohms
Interface Frequency	1 GHz
Working Voltage	500 Volts RMS Maximum

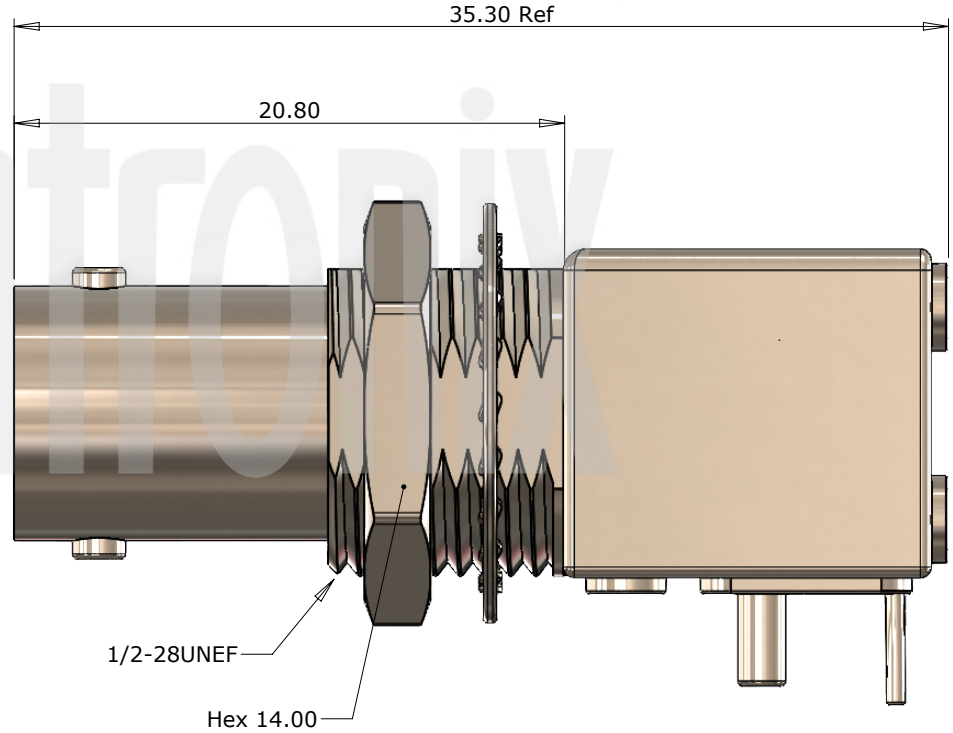

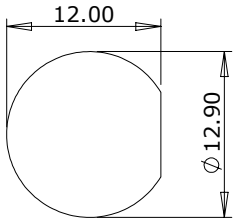

Panel Cut Out

	Description	Material	Finish
7	Grounding terminal	Copper	Tin
6	Mounting Post	Brass	Tin
5	Washer	Steel	Nickel
4	Lock Nut	Brass	Nickel
3	Dielectric	PE-606	White
2	Contact	Phosphor Bronze	Gold
1	Body	Zinc Alloy	Nickel

Unless otherwise specified tolerances
0.5-5 = ±0.2
›5-30 = ±0.4
›30-120 = ±0.6
›120-315 = ±1.0
›315-1000 = ±1.6
Angles = ±5°
Units = mm

This document is the confidential property of Gigatronix Limited and may not be copied, reproduced or transmitted to any third party without written authorisation.

Author	PJP
Drawn by	PJP
Drawing date	27/07/2020
Checked by	SM
Checked date	28/07/2020
Scale	2 : 1

Part Number BN02-X600-N06-3

Title: BNC Shielded Right Angle PCB Mount Jack, Nickel Plated, 75 ohms, Low Profile